FLEXIBLE. RELIABLE.
READY FOR INSTALLATION.

The new packaged SK plastic wastewater pump stations

- Robust construction
- High resistance to aggressive wastewater
- Long service life

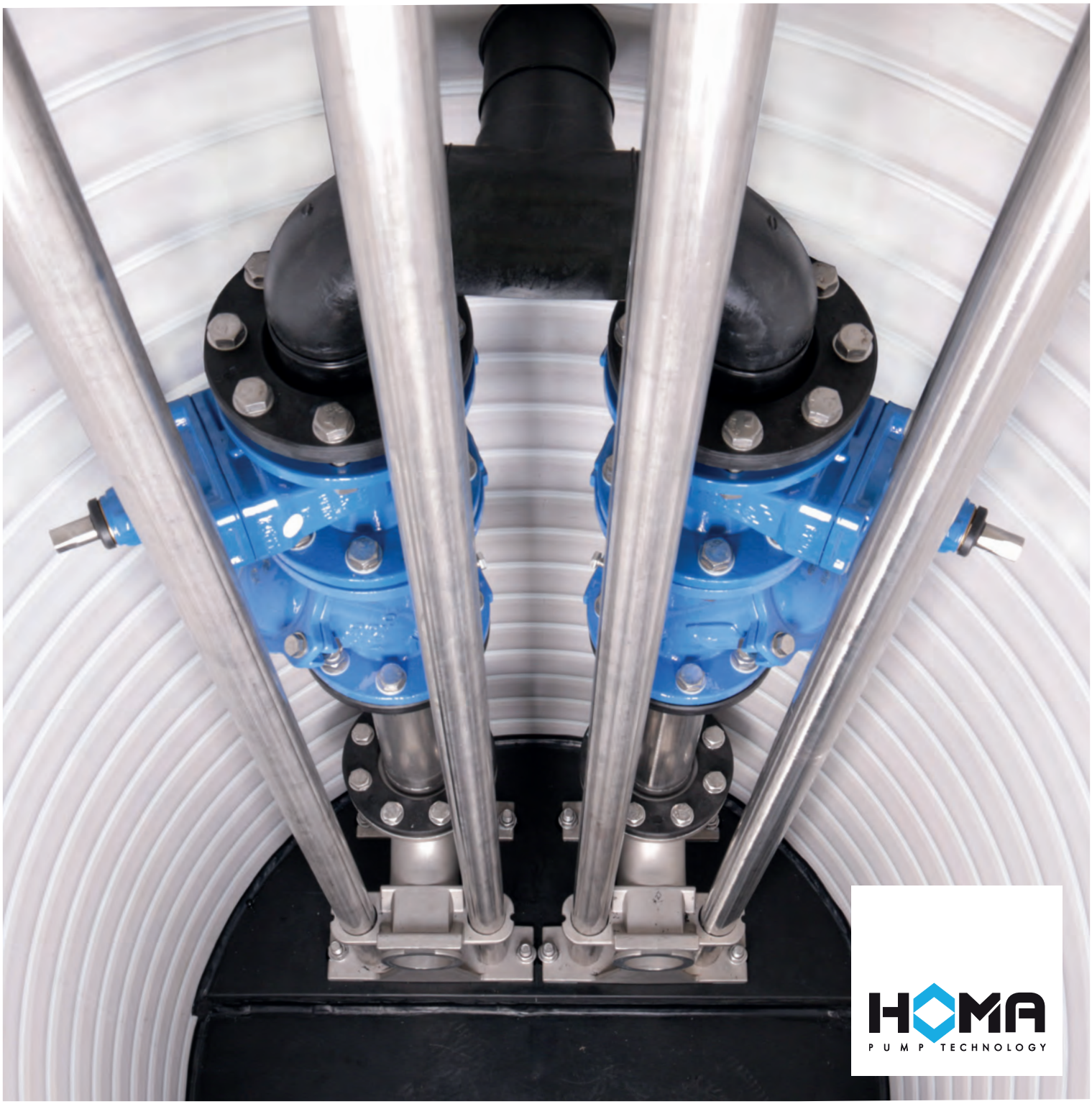

READY-TO-CONNECT, ROBUST AND VERSATILE

The SK and RP tanks are designed for a wide range of applications. In combination with HOMA submersible pumps, they are used as pump stations for wastewater disposal, pressure sewer systems or building drainage. Manufactured from polypropylene (PP) or high-density polyethylene (HDPE), they offer two key advantages in particular: low weight, resulting in reduced transport and installation costs, and high resistance to aggressive media, ensuring a long service life.

The SK and RP pump stations are supplied pre-assembled and ready for connection in the desired configuration including all installation fittings and the matching HOMA submersible pumps. Quite simply, a cost-efficient, complete solution.

HOMA PUMP STATIONS: RELIABLE AND SAFE

Ready-to-connect wastewater pump stations made of PE offer several advantages and are therefore the preferred system in municipal and industrial wastewater management.

Low weight and factory production - including all components required for pump station operation - significantly reduce on-site work and the project owner's costs compared with tanks made from concrete.

With extensive experience in this segment, HOMA has developed a complete program of pump stations together with leading manufacturers of plastic tanks. Standard diameters range from 800 to 2000 mm. Special sizes up to 2400 mm are available on request. Pump stations are available as single-pump or duplex pump stations and are divided into four product groups.

The **SKB6** and **SKB9** series with an internal tank diameter of 800 mm were developed for conveying wastewater from buildings and for property drainage. The **SK10** series and the **RP10** backflow prevention pump stations with an internal tank diameter of 1000 mm can be modularly configured and are manufactured in cooperation with Börder using high-quality REHAU tank components.

The largest series **SK12, SK15** and **SK20** with internal tank diameters from 1200 to 2000 mm are customized tank systems manufactured by HOMA in cooperation with IWS. Larger tank diameters up to 2400mm are available on request.

All HOMA plastic pump station tanks are delivered to site fully assembled, including discharge piping and guide rails, check valves, shut-off valves, flushing connection, hooks for chains and cables, and a connection for equipotential bonding. Only the pumps and tank covers must be selected and ordered separately.

The station body is made of either PE-HD (high-density polyethylene, HDPE) or PP (polypropylene). Unlike concrete, which was used in the past for wastewater tanks, PE-HD and PP are not only much easier to install, they also offer high resistance to fats, oils, hydrogen sulfide and virtually all chemicals that would attack and destroy concrete.

Some manufacturers recommend pump station made of glass-fiber reinforced plastic. This material is often used in the renovation of old pump stations. The main disadvantages of glass-fiber reinforced plastic compared with PP and PE are lower chemical resistance to organic solvents, lower UV stability and lack of material homogeneity. Those are disadvantages that significantly reduce service life compared with PP and PE.

PE-HD and PP tanks can achieve service lives of up to 100 years and are fully recyclable at the end of their lifecycle.

HOMA SERIES - HOMA PUMP STATION SKB6 - SKB9 / DN800

OUR KNOW-HOW = YOUR ADVANTAGE

The HOMA SKB6 and SKB9 are ready-to-connect wastewater pump stations with buoyancy-protected collection tanks. They are primarily used for residential, commercial and municipal applications.

The pump stations are suitable both for pressure sewer systems with submersible wastewater grinder pumps or for wastewater pumps equipped with a channel or vortex impeller. The tanks are designed for installation locations in accordance with DIN EN 124 and can be fitted with tank covers of load classes A 15, B 125 or D 400.

Construction and design

The SKB6 and SKB9 series consist of a ready-to-install, buoyancy-protected polyethylene tank with all required accessories to install a HOMA pump. Depending on size, the tank features three (SKB6) or five (SKB9) stepped inlet connections DN 100 / DN 150 as well as one DN 200 inlet. Upper connections can be used flexibly for ventilation and cable entry. The tank design complies with DIN EN 13598. The pump stations are designed for operation with one or two pumps and include an automatic coupling system with dual guide rails.

Equipment includes:

- Coupling system for one or two pumps
- Discharge piping 1½" made of powder-coated cast iron or stainless steel
- Soft-seated ball check valve made of cast iron
- Gate Valve
- A STORZ C coupling on the discharge pipe to enable flushing with water.
- Discharge pipe penetration through the tank wall with R 1½" male thread

The suspended pump coupling ensures a sediment-free tank bottom and enables particularly easy pump removal and installation. The SKB tanks are made of polyethylene, which is lightweight. The materials are corrosion-resistant to municipal wastewater and ensure long service life with minimal maintenance.

SKB6 and SKB9 pump stations are delivered fully pre-assembled and are available as single- or duplex-pump stations depending on configuration. They are equipped with HOMA submersible pumps from the **TP30, TP50, TCV** and **GRP** series. Tank covers and control panels are available in various versions and must therefore be configured separately. A wide range of accessories - such as control panels, vacuum breakers or special tank covers - are also available from HOMA.

DESIGN – WELL-ENGINEERED TECHNOLOGY DOWN TO THE LAST DETAIL

All details of the SKB6–SKB9 pump stations at a glance.

❶ PE wastewater tank complete with all valves and piping for fast and cost-effective installation.

❷ SKB9 with frost-proof discharge outlet 1100 mm below the top of the tank.

❸ For pressure sewer systems with grinder pumps. For drainage applications with channel or vortex impeller pumps.

❹ Automatic coupling system with underwater pump connection for easy assembling and disassembling.

❺ Low weight and integrally molded lifting lugs for easy transport and installation.

❻ Various inlet options in DN100, DN150 and DN200.

❼ Sediment-free spherical sump bottom thanks to suspended pump coupling and shape of sump.

HOMA SERIES - HOMA PUMP STATION SKB6 - SKB9 / DN800

Suitable pump types

Series	Free passage (mm)	Impeller	Motor power P2 (kW)	H max. (m)	Q max. (m^3/h)	Discharge
TP30M	30 - 42	Single channel	0,9 - 1,2	14 - 19	33 - 43	G2
TP30V	30 - 42	Vortex	0,7 - 1,2	9 - 13	32 - 38	G2
TP50M	50 - 65	Single channel	1,0 - 4,4	7,5 - 32	42 - 82	G2 1/2
TP50V	50 - 65	Vortex	1,0 - 4,4	8 - 22	41 - 53	G2 1/2
TCV	35 - 50	Vortex	0,7 - 1,2	7 - 10	18 - 33	G1/2 - G2
GRP	-	Cutting system	1,1 - 4,4	20 - 52	15 - 28	G2

Sump types

Version	No of pumps	Overall height min	Overall height max.	Discharge	Internal tank diameter / access opening (mm)
SKB6-45/1	1	1770 mm	2230 mm	R1 1/2" AG	800 / Ø 625
SKB6-45/2	2	1770 mm	2230 mm	R1 1/2" AG	800 / Ø 625
SKB9-45/1	1	2220 mm	2680 mm	R1 1/2" AG	800 / Ø 625
SKB9-45/2	2	2220 mm	2680 mm	R1 1/2" AG	800 / Ø 625

Materials

Tank body	Polyethylene
Coupling system	Cast iron, EN-GJL-250, powder-coated
Pump guide rails	Stainless steel
Discharge piping	Cast iron, EN-GJL-250, powder-coated
Threaded connections, valves	Stainless steel

HOMA SERIES - HOMA PUMP STATION SKB6 - SKB9 / DN800

Installation dimensions (all dimensions in mm)

SKB6-45/1(2) + SKB9-45/1(2)

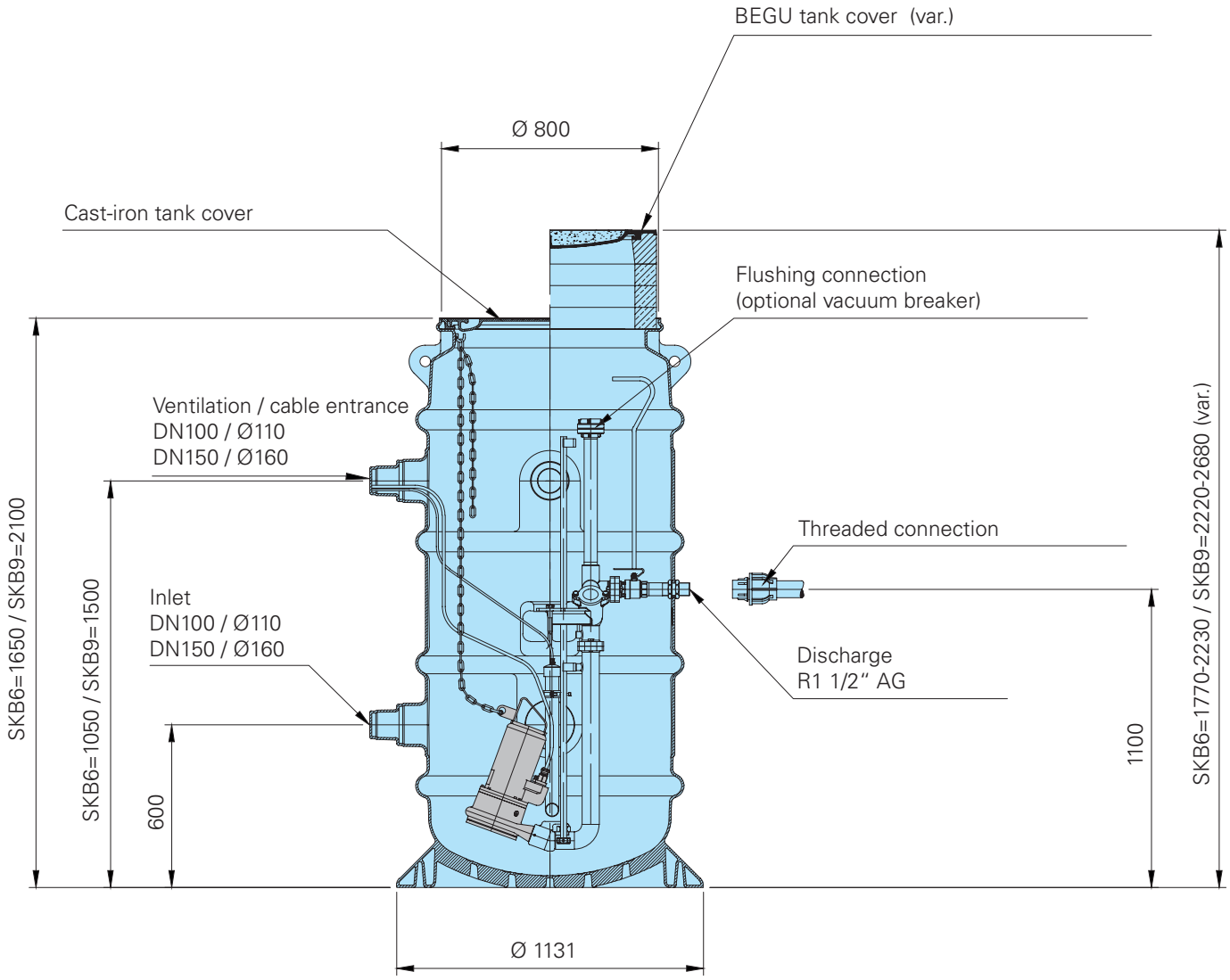

var.:
Tank depth and tank cover can be individually adapted.

BÖRDER SERIES - HOMA PUMP STATION SK10 / DN1000

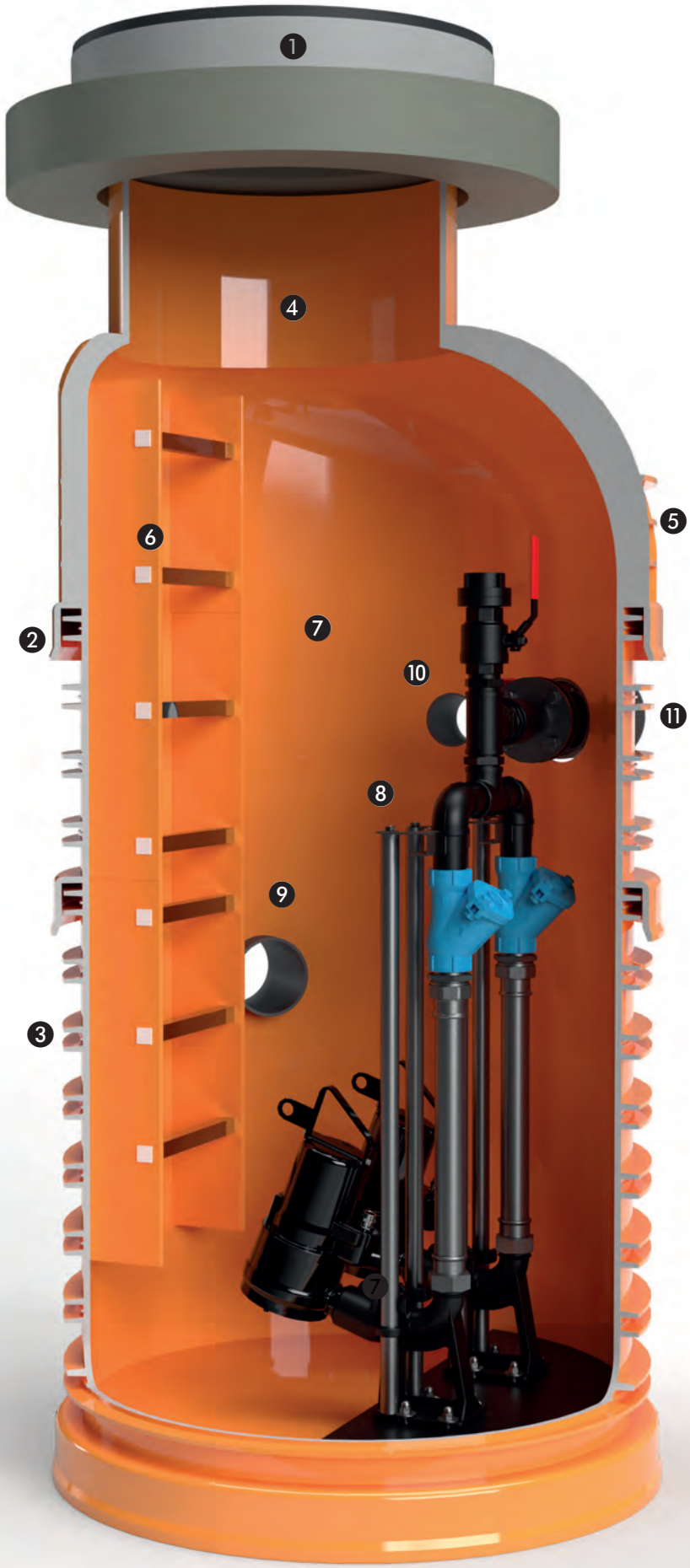

OUR KNOW-HOW = YOUR ADVANTAGE

Börder GmbH has been active in wastewater engineering for 25 years and manufactures durable pum pstations for municipal and industrial wastewater systems with components from the REHAU Group. In cooperation with Börder, HOMA developed the ready-to-connect pump station SK10 for installation depths from 2 to 5 m.

Construction and equipment
The modular design with standardized connections enables short installation times and high operational reliability. For flexible adaptation to local site conditions, the tanks feature:

- 2 inlets DN150
- discharge connection for PE63×5.4, PE75×6.8 or PE80×5.4
- 2 inlets DN100 for cables and/or aeration.

The discharge pipe is equipped with a flushing connection including a STORZ coupling. All SK10 tanks include an access ladder in accordance with BG BAU. A DN625 hybrid support ring for the assembling of access covers class D.

Using filler-free polypropylene reduces weight while achieving high resistance to fats, oils, hydrogen sulfide, chemicals and mechanical loads. The Safety-Lock seal developed by REHAU ensures secure, load-decoupled sealing of the tank elements.

The SK10 series meets the requirements of DIBt approval Z-42.1-400, EN 13476-3 Type B and SN EN 476. The smooth inner surface and profiled outer surface further support safe operation. Installed guide rails and discharge connection enable easy installation and removal of HOMA pumps from the **GRP 16–50** and **TP30–70** series.

Special version SU10
For highly aggressive media (e.g., silage leachate), HOMA offers the special SU10 version. It is equipped with an above-water coupling system for one or two stainless steel pumps from the **CH432–436** and **CTP50** series.

AutoCAD and 3D data are available for all pump stations. The polypropylene used is fully recyclable. To reduce waste volumes, REHAU offers the Re-Turn program, a take-back system for residual and dismantled materials.

DESIGN – WELL-ENGINEERED TECHNOLOGY DOWN TO THE LAST DETAIL

All details of the SK10 pump stations at a glance.

❶ Pump station for installation depths from 2–5 m, complete with all valves and piping for fast and cost-effective installation.

❷ Permanently tight thanks to Safety-Lock seal and load-decoupled element sealing.

❸ Buoyancy-proofed up to ground level due to interlocking reinforcement ribs in the surrounding soil.

❹ Tank body made of filler-free polypropylene, high resistance to fats, oils, hydrogen sulfide and virtually all chemicals.

❺ Modular system: cone, tank rings and base can be combined for virtually any installation situation.

❻ Integrated access ladder in accordance with BG BAU requirements.

❼ Approved according to DIBt Z-42.1-400 and EN 13476-3 Type B and SN EN 476, with smooth inner and profiled outer surface.

❽ Guide rails and discharge connection for easy pump connection and disassembling. Even under water.

❾ 2× inlet DN150

❿ 2× cable conduit DN100

⓫ Discharge connection PE63×5.4 mm, PE75×6.8 mm or PE80×5.4 with STORZ C flushing connection.

BÖRDER SERIES - HOMA PUMP STATION SK10 / DN1000

Suitable pump types

Series	Free passage (mm)	Impeller	Motor power P2 (kW)	H max. (m)	Q max. (m^3/h)	Discharge
GRP16-50	-	Cutting system	1,1 - 4,4	20 - 52	15 - 28	G2
TP30M	30	Single channel	0,7 - 1,2	14 - 19	33 - 43	G2
TP30V	42	Vortex	0,9 - 1,2	9 - 13	32 - 38	G2
CH432	10 (sieve)	Multi channel	1,0 - 1,3	4 - 17	4 - 25	G2
TP48M	50	Single channel	1,1	14,5	34,9	G2
TP48V	50	Vortex	1,1	11,5	25,9	G2
TP50M	50	Single channel	0,8 - 4,4	7,5 - 32	42 - 82	G2 1/2
TP50V	50 - 65	Vortex	1,0 - 4,4	8 - 22	41 - 53	G2 1/2
CH436	10 (sieve)	Multi channel	1,5 - 2,8	4 - 23	6 - 50	G2 1/2
CTP50	50	Single channel	1,5 - 4,4	4 - 26	10 - 50	G2 1/2
TP53M	50	Single channel	0,8 - 4,4	7,5 - 30	28 - 82	G3
TP53V	50 - 65	Vortex	1,0 - 4,4	7,5 - 19	10 - 70	G3
TP70M	70	Single channel	1,3	3 - 13	20 - 60	G3
TP70V	70	Vortex	1,1 - 4,4	2 - 20	10 - 40	G3

Sump types

Version	No of pumps – pump type	Overall height min (mm)	Overall height max * (mm)	Discharge	Internal tank diameter / access opening (mm)
SK10-50/1	1x GRP16-50 or TP30-48	2430	5180	PE63x5,4mm	1000 / Ø 625
SK10-50/2	2x GRP16-50 or TP30-48	2430	5180	PE63x5,4mm	1000 / Ø 625
SK10-65/1	1x TP50	2430	5180	PE75x6,8mm	1000 / Ø 625
SK10-65/2	2x TP50	2430	5180	PE75x6,8mm	1000 / Ø 625
SK10-80/1	1x TP53 or TP70 with G3"discharge	2430	5180	PE80x5,4mm	1000 / Ø 625
SK10-80/2	2x TP53 or TP70 with G3" discharge	2430	5180	PE80x5,4mm	1000 / Ø 625
SU10-50/1 with above-water coupling	1x CH432, 436 or CTP50	2430	5180	PE63x5,3mm with Plasson screw connection	1000 / Ø 625
SU10-50/2 with above-water coupling	2x CH432, 436 or CTP50	2430	5180	PE63x5,3mm with Plasson screw connection	1000 / Ø 625

* greater depths available on request

Materials

Tank body	Filler-free polypropylene (PP)
Piping	Stainless steel AISI 316
Guide rails	Stainless steel AISI 316
Coupling foot / valves	Cast iron EN-GJL-250 / ductile iron (GGG)
Access ladder	GRP plastic
Lifting chain	Stainless steel AISI 316

BÖRDER SERIES - HOMA PUMP STATION SK10 / DN1000

Installation dimensions (all dimensions in mm)

SK10-(50-80)/1(2)

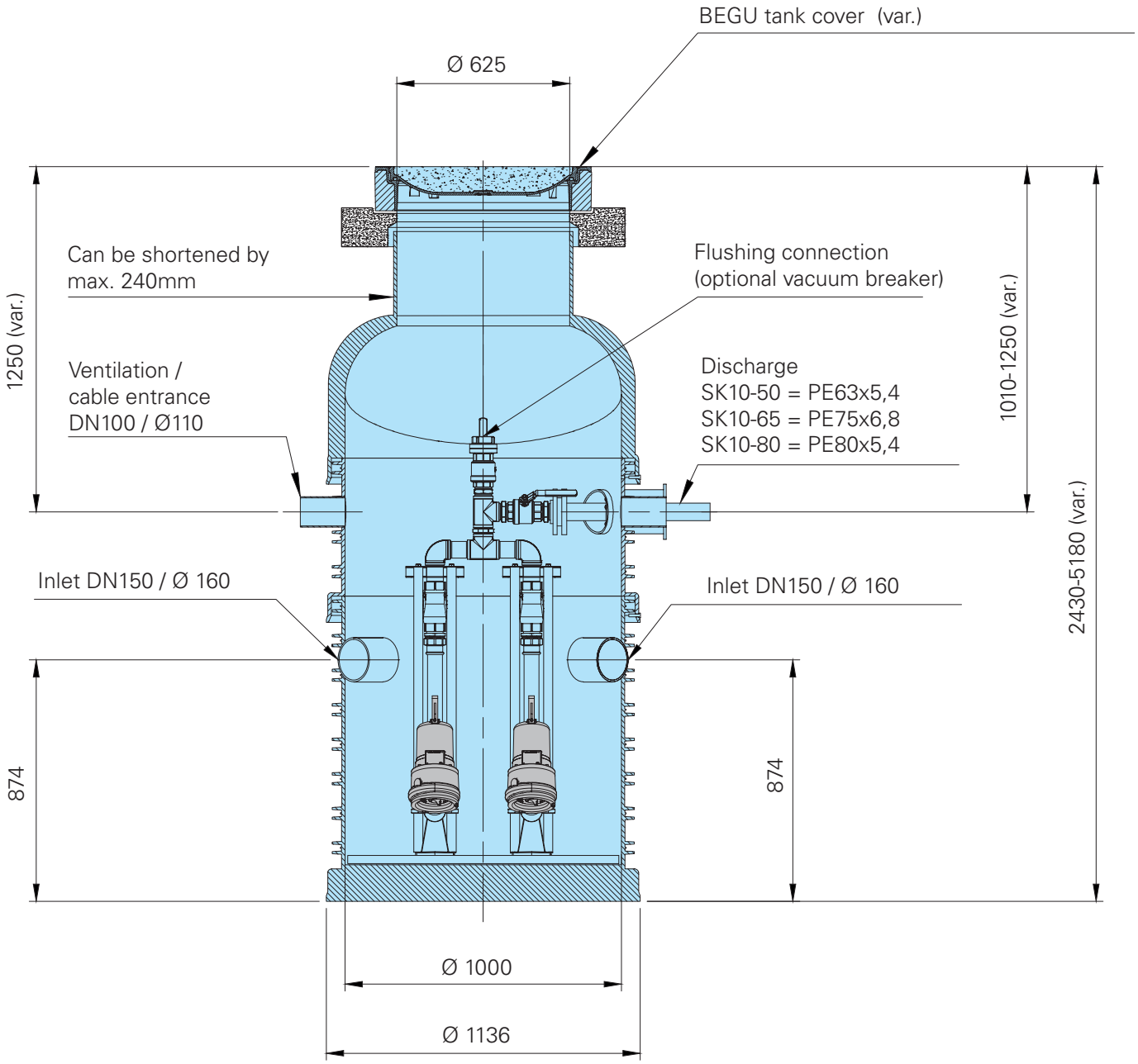

var.:
Tank depth, cover, position and dimensions of inlet, discharge connection, cable entry as well as ventilation/deaeration can be individually adapted.

BÖRDER SERIES - HOMA BACKWATER PUMP STATION
RP10 / DN1000

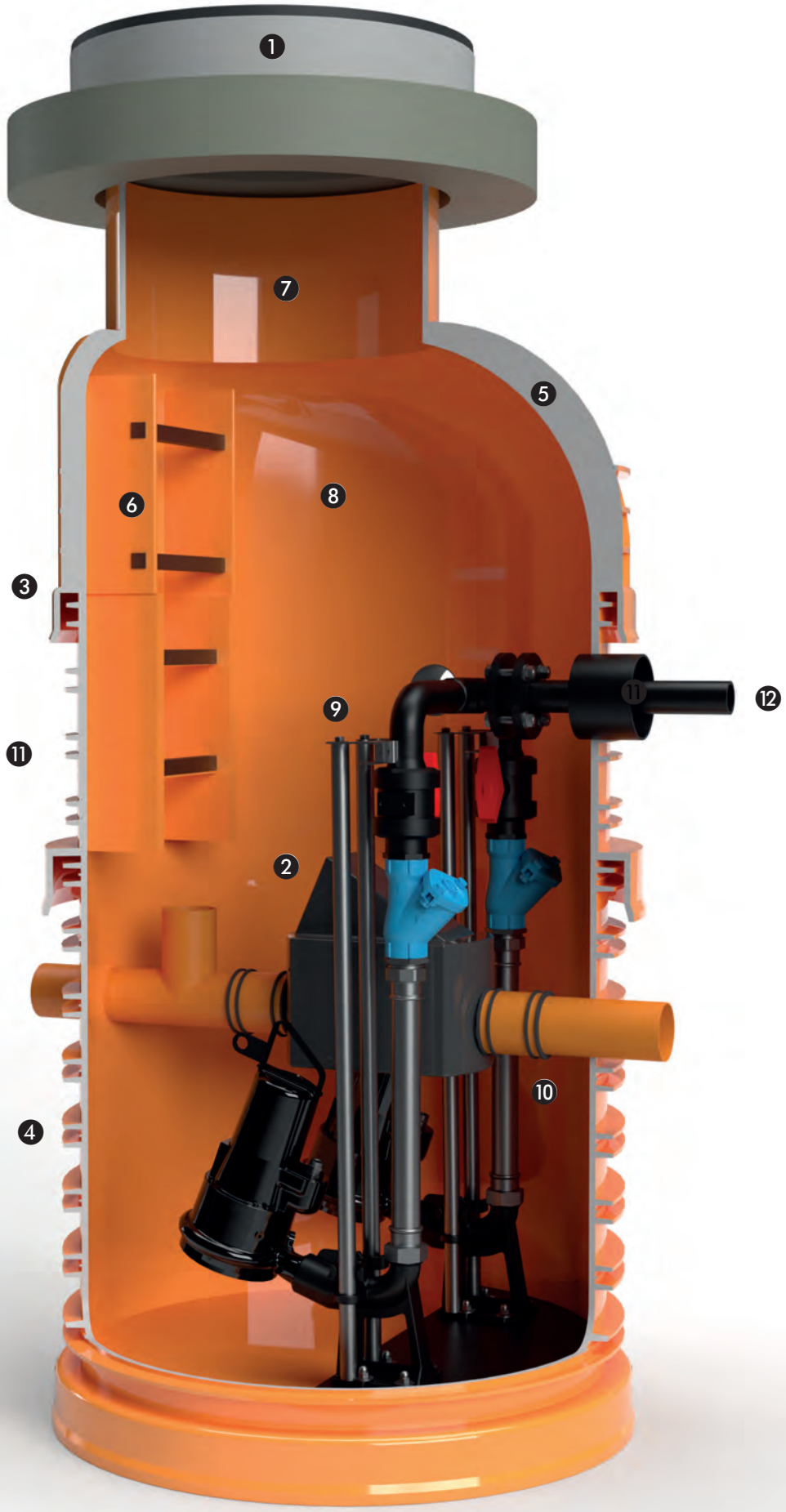

OUR KNOW-HOW = YOUR ADVANTAGE

Due to climate change the frequency of heavy rainfall is increasing. To avoid the backflow of sewage and rainwater via discharge pipes into the building has become a central component of modern wastewater systems. The backwater pump station RP 10 from HOMA has been developed to protect buildings from those risks. If the wastewater can no longer drain by gravity, an integrated motor-driven backflow flap closes the sewer line and activate 2 wastewater pumps to lift the wastewater via a discharge pipe into the public sewer.

Construction and equipment
In cooperation with Börder GmbH, HOMA developed the RP10 backwater pump station, which are manufactured exclusively for HOMA. The pre-assembled station made of high-quality, filler-free polypropylene allows short installation times and high operational reliability. HOMA offers versions for the connection to DN100 sewer pipes.
All RP10 tanks are equipped with:

- an access ladder in accordance with BG BAU
- a DN625 hybrid support ring for class D covers
- 2 conduits DN100 for cable or aeration

Using filler-free polypropylene reduces weight while providing high resistance to fats, oils, hydrogen sulfide, chemicals and mechanical loads. The Safety-Lock seal developed by REHAU ensures secure, load-decoupled sealing of the tank elements.

The RP10 series meets the requirements of DIBt approval Z-42.1-400, EN 13476-3 Type B and SN EN 476 and features a smooth inner surface and a profiled outer surface. Installed guide rails and coupling feet allow easy installation and removal of HOMA pumps from the **GRP 16–50**, **TP30 - TP50** series.

AutoCAD and 3D data are available for all RP10 tanks. The polypropylene used is fully recyclable. To reduce waste volumes, REHAU offers the ReTurn program, a take-back system for residual and dismantled materials.

DESIGN – WELL-ENGINEERED TECHNOLOGY DOWN TO THE LAST DETAIL

All details of the RP10 pump stations at a glance.

❶ Flow-through tank for wastewater lines for installation depths from 2–5 m with backflow protection, valves and piping for fast, cost-effective installation.

❷ Backflow flap DN100 with motor (IP 68) and 230 V control unit.

❸ Permanently tight thanks to Safety-Lock seal and load-decoupled element sealing.

❹ Buoyancy-proofed up to ground level due to reinforcement ribs locked by the surrounding soil.

❺ Tank system made of filler-free polypropylene, high resistance to fats, oils, hydrogen sulfide and virtually all chemicals.

❻ Integrated access ladder in accordance with BG BAU requirements.

❼ Modular system: cone, tank rings and base can be combined for virtually any installation situation.

❽ Approved according to DIBt Z-42.1-400 and EN 13476-3 Type B and SN EN 476 with smooth inner and profiled outer surface.

❾ Guide rails and discharge connection for easy pump installation/removal under water.

❿ Internal piping DN100 with overflow nozzle for backflow relief.

⓫ 2× cable conduit DN100

⓬ Discharge connection PE63×5.4 mm or PE75×6.8 mm.

BÖRDER SERIES - HOMA BACKWATER PUMP STATION RP10 / DN1000

Suitable pump types

Series	Free passage (mm)	Impeller	Motor power P2 (kW)	H max. (m)	Q max. (m^3/h)	Discharge
GRP16-50	-	Cutting system	1,1 - 4,4	20 - 52	15 - 28	G2
TP30M	30	Single channel	0,7 - 1,2	14 - 19	33 - 43	G2
TP30V	42	Vortex	0,9 - 1,2	9 - 13	32 - 38	G2
TP48M	50	Single channel	1,1	14,5	34,9	G2
TP48V	50	Vortex	1,1	11,5	25,9	G2
TP50M	50	Single channel	0,8 - 4,4	7,5 - 32	42 - 82	G2 1/2
TP50V	50 - 65	Vortex	1,0 - 4,4	8 - 22	41 - 53	G2 1/2

Sump types

Version	No of pumps – pump type	Overall height min (mm)	Overall height max * (mm)	Discharge	Internal tank diameter / access opening (mm)
RP10-50-1-100	1x GRP16-50 or TP30-48	2430	5180	PE63x5,4mm	1000 / Ø 625
RP10-50-2-150	2x GRP16-50 or TP30-48	2430	5180	PE63x5,4mm	1000 / Ø 625
RP10-65-1-150	1x TP 50	2430	5180	PE75x6,8mm	1000 / Ø 625

* greater depths available on request

Materials

Tank body	Filler-free polypropylene (PP)
Piping	Stainless steel AISI 316
Guide rails	Stainless steel AISI 316
Coupling foot / valves	Cast iron EN-GJL-250 / ductile iron (GGG)
Access ladder	GRP plastic
Lifting chain	Stainless steel AISI 316

BÖRDER SERIES - HOMA BACKWATER PUMP STATION RP10 / DN1000

Installation dimensions (all dimensions in mm)

RP10-(50-65)/1(2)

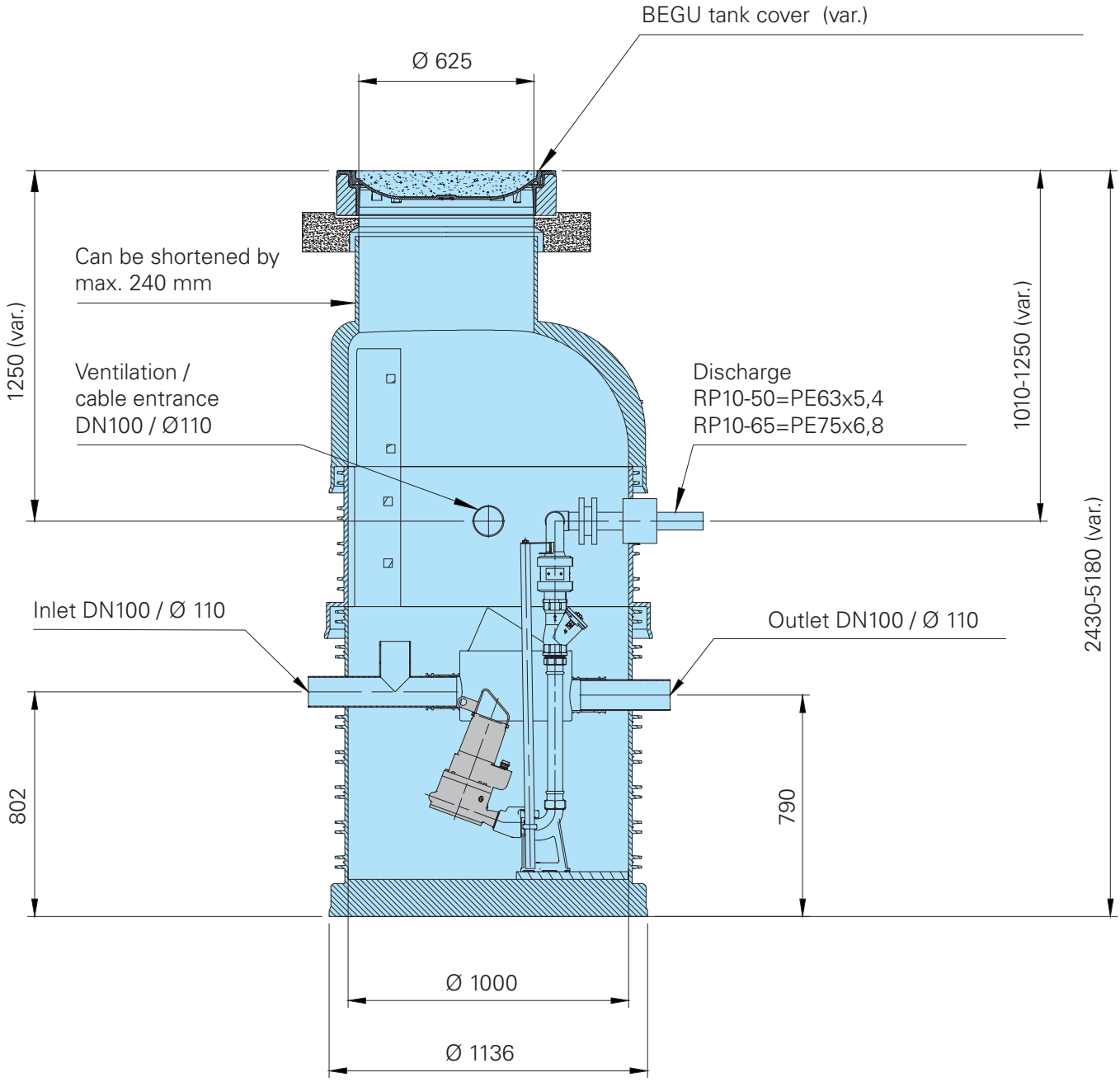

var.:
Tank depth, cover, position and dimensions of inlet, discharge connection, cable entry as well as ventilation/deaeration can be individually adapted.

IWS SERIES - HOMA PUMP STATION
SK12-20 / DN1200-2000

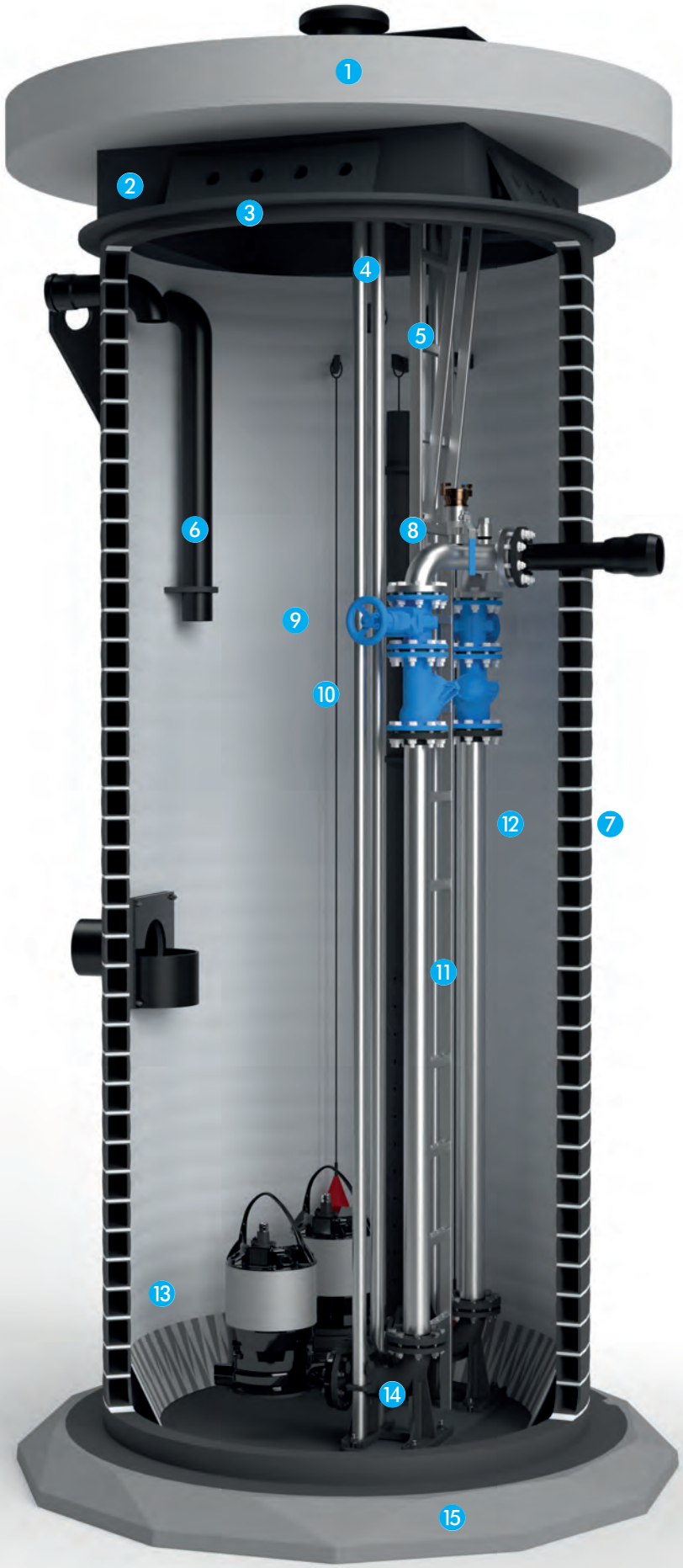

OUR KNOW-HOW = YOUR ADVANTAGE

Innovative Water Systems Ltd. (IWS), headquartered in Estonia, has been manufacturing high-quality pump stations, septic tanks, rainwater tanks and large-diameter PE-HD/HDPE pipes with internal diameters up to 3000 mm since 2007. To date, more than 5.000 tanks and systems have been installed in the Nordic countries and Central Europe. Based on this long-standing experience and high-quality standards, HOMA selected IWS as its partner for the wastewater tanks of the SK12 to SK20 series.

Construction and equipment

The standard delivery program includes tanks with clear internal diameters from 1.200 to 2.000 mm for installation depths from 2,5 to 6,0 m. Larger diameter and installation depths over 6 m are available on request. Tanks with installation depths over 5 m are additionally equipped with an intermediate platform or a fall protection system. The double-walled PE-HD/HDPE tanks are customized at the IWS plant and equipped with HOMA components to form a complete wastewater pump station. The number and position of wall penetrations for inlet, discharge pipe and cables can be freely selected.

All wall penetrations are made of PE-HD/HDPE and are welded to the tank body on the inside and outside. The double-walled tank structures of the SK12 to SK20 series are corrosion- and aging-resistant to aggressive wastewater as well as aqueous salt and alkaline solutions. They are manufactured as joint-free, watertight prefabricated pump station in accordance with EN 13476 with a ring stiffness of at least SN 4 and feature smooth inner and outer surfaces.

The PE-HD/HDPE used is 100% recyclable, highly resistant to mechanical damage and designed for a service life of at least 50 years. All tanks undergo extensive testing prior to delivery to ensure the high quality of the HOMA SK series.

The sump has a circumferential bench to reduce residual water volume and prevent sedimentation in the corner. The tank base is reinforced for mounting the coupling feet and prevents deformation of the sump floor due to groundwater pressure.

All IWS-HOMA tanks include a buoyancy protection plate and are buoyancy-proofed up to the top of the tank. For size SK20 (diameter 2000), three additional ring elements are supplied to increase the weight of the base plate. Integrated lifting lugs facilitate lowering the tanks into the excavation.

Standard complete equipment

The IWS-HOMA pump stations from the standard program are delivered fully equipped with:

- stainless steel ladder with handrail and entry aid
- stainless steel guide rails with holders for chain and cable
- stainless steel discharge piping with shut-off and check valve made of cast iron EN-GJL-250
- discharge connection for HOMA submersible pumps
- two aeration pipes DN100 / Ø110
- protective pipe for level probes made of PE with brackets
- inlet pipe DN160–250
- flushing connection for STORZ C, 1½"
- equipotential bonding with 20 m cable

Covers and pumps are available in various versions and are therefore offered as separate items.

DESIGN – WELL-ENGINEERED TECHNOLOGY DOWN TO THE LAST DETAIL

All details of the SK12, SK15 and SK20 tanks at a glance.

❶ Access cover
❷ Entry aid with telescopic extension (AISI 316)
❸ Top cover with frame for access cover
❹ Pump guide rail (AISI 316)
❺ Safety ladder (AISI 316)
❻ Vent pipe (PE)
❼ Tank cylinder (PE100-SN4, double-walled)
❽ Discharge manifold T-piece (AISI 316, 120°)
❾ Gate valve (EN-GJS-500-7, soft-seated)
❿ Check valve (EN-GJS-400-15, ball made of NBR)
⓫ Discharge pipe (AISI 316 or PE100 SDR17)
⓬ Service platform (PE100 or AISI 316), optional
⓭ Sump bottom with circumferential bench to prevent sedimentation.
⓮ Coupling foot (EN-GJL-250, epoxy-coated)
⓯ Tank base with integrated buoyancy protection

IWS SERIES - HOMA PUMP STATION
SK12-20 / DN1200-2000

Suitable pump types

Series	Free passage (mm)	Impeller	Motor power P2 (kW)	H max. (m)	Q max. (m^3/h)	Discharge
GRP16-50	-	Cutting system	1,1 - 4,4	20 - 52	15 - 28	G2
TP30M	30	Single channel	0,7 - 1,2	14 - 19	33 - 43	G2
TP30V	42	Vortex	0,9 - 1,2	9 - 13	32 - 38	G2
CH432	10 (sieve)	Multi channel	1,0 - 1,3	4 - 17	4 - 25	G2
TP48M	50	Single channel	1,1	14,5	34,9	G2
TP48V	50	Vortex	1,1	11,5	25,9	G2
TP50M	50	Single channel	0,8 - 4,4	7,5 - 32	42 - 82	G2 1/2
TP50V	50 - 65	Vortex	1,0 - 4,4	8 - 22	41 - 53	G2 1/2
CTP50	50	Single channel	1,5 - 4,4	4 - 26	10 - 50	G2 1/2
TP53M	50	Single channel	0,8 - 4,4	7,5 - 30	28 - 82	G3
TP53V	50 - 65	Vortex	1,0 - 4,4	7,5 - 19	10 - 70	G3
TP70M	70	Single channel	1,3	3 - 13	20 - 60	G3
TP70V	70	Vortex	1,1 - 4,4	2 - 20	10 - 40	G3
OC1 / Alligator	-	Chopper	2,9 - 14,4	8 - 52	45 - 128	DN80
OC2 / Alligator	-	Chopper	2,9 - 14,4	9 - 51	54 - 130	DN100
VX13	80	Vortex	1,3 - 25,4	7 - 54	54 - 133	DN80
VX24	100	Vortex	3,2 - 19,3	9 - 27	100 - 228	DN100
MXS13	80	Single channel	1,3 - 25,4	6 - 42	72 - 200	DN80
MXS23/MXS24	80 - 100	Single channel	1,6 - 25,4	5 - 42	75 - 350	DN100
MXS34	100	Single channel	7,3 - 19,3	8 - 28	176 - 390	DN150

Sump types

Version	No of pumps – pump type	Overall height min (mm)	Overall height max (mm)	Discharge	Internal tank diameter / access opening (mm)
SK12-50/1	1x GRP / TP30-48	2500	6000	PE63x5,4	1200 / Ø 800
SK12-50/2	2x GRP / TP30-48	2500	6000	PE63x5,4	1200 / Ø 800
SK12-65/1	1x TP50	2500	6000	PE75x6,8	1200 / Ø 800
SK12-65/2	2x TP50	2500	6000	PE75x6,8	1200 / Ø 800
SK12-80/1	1x OC / TP70 / MXS / VX	2500	6000	PE80x5,4	1200 / Ø 800
SK12-80/2	2x OC / TP70 / MXS / VX	2500	6000	PE80x5,4	1200 / Ø 800
SK15-50/1	1x GRP56-111	2500	6000	PE63x5,4	1500 / Ø 800
SK15-50/2	2x GRP56-111	2500	6000	PE63x5,4	1500 / 1300x800
SK15-65/1	1x TP50	2500	6000	PE75x6,8	1500 / Ø 800
SK15-65/2	2x TP50	2500	6000	PE75x6,8	1500 / 1300x800
SK15-80/1	1x OC / TP70 / MXS13 / VX13	2500	6000	PE80x5,4	1500 / Ø 800 or 1300x800
SK15-80/2	2x OC / TP70 / MXS13 / VX13	2500	6000	PE80x5,4	1500 / 1300x800
SK15-100/1	1x OC / MXS23 / VX24	2500	6000	PE100x6,6	1500 / 1300x800
SK15-100/2	2x OC / MXS23 / VX24	2500	6000	PE100x6,6	1500 / 1300x800
SK20-80/1	1x OC / TP70 / MXS13 / VX13	2500	6000	PE80x5,4	2000 / 1300x800
SK20-80/2	2x OC / TP70 / MXS13 / VX13	2500	6000	PE80x5,4	2000 / 1300x800
SK20-100/1	1x OC / MXS23/24 / VX24	2500	6000	PE100x6,6	2000 / 1300x800
SK20-100/2	2x OC / MXS23/24 / VX24	2500	6000	PE100x6,6	2000 / 1300x800
SK20-150/1	1x OC / MXS34	2500	6000	PE150x9,5	2000 / 1300x800
SK20-150/2	2x OC / MXS34	2500	6000	PE150x9,5	2000 / 1300x800

Materials

Tank body	PE-HD/HDPE
Piping	Stainless steel AISI 316
Guide rails	Stainless steel AISI 316
Coupling foot / valves	Cast iron EN-GJL-250
Access ladder	Stainless steel
Lifting chain	Stainless steel AISI 316

IWS SERIES - HOMA PUMP STATION
SK12-20 / DN1200-2000

Installation dimensions (all dimensions in mm)

SK(12-20)-(50-150)/1(2)

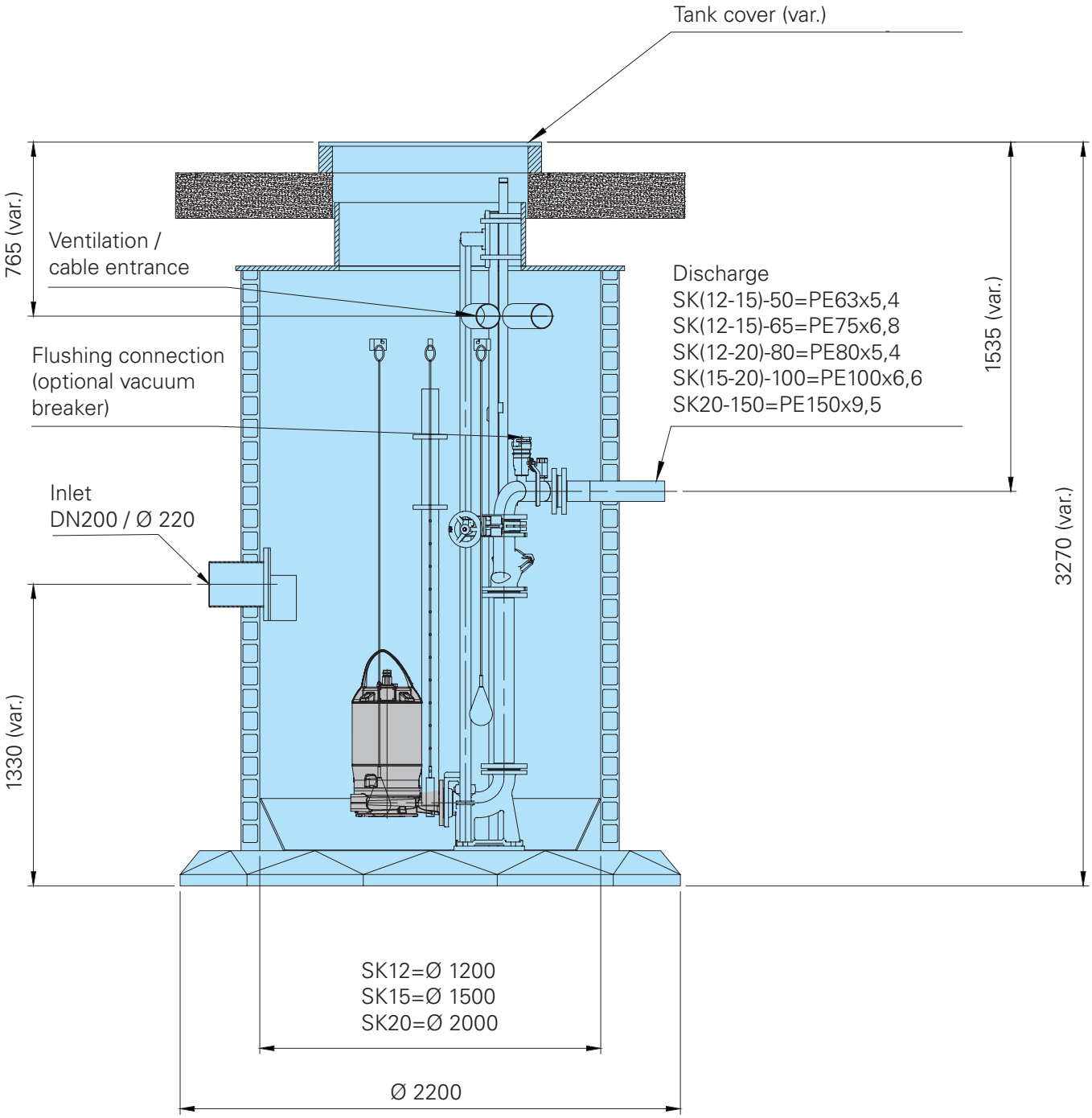

var.:
Tank depth, cover, position and dimensions of inlet, discharge connection, cable entry as well as ventilation/deaeration can be individually adapted

The HOMA product range

- Submersible drainage pumps
- Construction pumps
- Submersible fire pumps
- Submersible deep well pumps
- Submersible waste water pumps
- Submersible pumps with cutting systems
- Domestic waste water disposal units
- Waste water disposal units
- Pre-assembled pump stations
- Agitators
- Tank cleaning systems
- Garden pumps and automatic domestic water systems
- Propeller pumps
- Pump control and automation systems

In operation worldwide

HOMA pumps and systems are employed in over 100 countries worldwide – in a myriad of projects, large and small, including the Palm Islands in Dubai. They meet all international safety and production standards and are certified by the relevant state or private bodies for waste water disposal.
It is one of our main objectives to maintain and extend this high standard at all times.

Sales and service network

HOMA stays close to its customers through a comprehensive network of professional sales and service agencies.
HOMA also makes selecting and designing pump systems as straightforward as possible through HOP.SEL, our specially developed software, available free of charge online.

HOMA Pumpenfabrik GmbH
Industriestraße 1 › 53819 Neunkirchen-Seelscheid / Germany
Telefon: +49(0)2247/702-0
E-Mail: info@homa-pumpen.de › Internet: www.homa-pumpen.de

HOMA PUMP TECHNOLOGY

We reserve the right to make changes in the interest of further technical development as well as

Bilder: © Homa Pumpenfabrik

FIND US ON FACEBOOK!
facebook.com/homapumpen

0.5/0126 (fly) gra / Nr.