HOMA PUMP TECHNOLOGY

Electric submersible pumps for sewage and effluent. Spherical clearance 70 mm.

TP 70

Application

HOMA TP 70 series pumps are suitable for pumping waste water, sewage or effluent. With their 70 mm spherical clearance they are especially able to pump liquids with larger suspended solids like fibres, textiles etc. They are used for various applications in public and private sector, trade and industry.

DIN EN 12050-1: Conformity and design approved and controlled by LGA, certificate No. 0220119.

Installation: Transportable or permanent. Models with float switch control for automatic pump operation, depending on liquid level in the sump.

Pumped liquid: Clear water and drainage water, sewage containing soft solids. Max. liquid temperature: 35°C, short term up to 60°C.

Operation: permanent (S1).

Design

Fully submersible, compact integrated motor-pump unit consisting of:

Pump: Single stage centrifugal pump with horizontal discharge.

Impellers: M = Closed single channel impeller for liquids containing impurities and sludge with solid particles. V = Vortex impeller for liquids containing a high level of impurities or fibrous matter and containing gas.

Motor: Fully submersible, pressure tight electric motor. Insulation class F. Degree of protection IP 68.

Motor Start:

TP70…13-36:	Direct-on-line
TP70V50:	Direct-on-line or Star-delta-start

Cable:

TP70…13-36:	H07RN-F 7 G 1,5
Model C:	H07RN-F 10 G 1,5
TP70…13-36(Ex):	H07(PLUS) 6 G 1,5
Model C:	H07(PLUS) 2 x 1,5
TP70V50…:	H07RN-F 10 G 1,5
Model C:	H07RN-F 12 G 1,5
TP70V50…(Ex):	H07(PLUS) 10 G 1,5
Model C:	H07(PLUS) 2 x 1,5

Shaft/Bearing: Large diameter stainless steel rotor shaft, pre-lubricated bearings.

Seals: Combination of mechanical seals (silicon-carbide) in a separate oil chamber. Oil inspection from outside. Electronic seal probe fitted into the oil chamber optional, Model C.

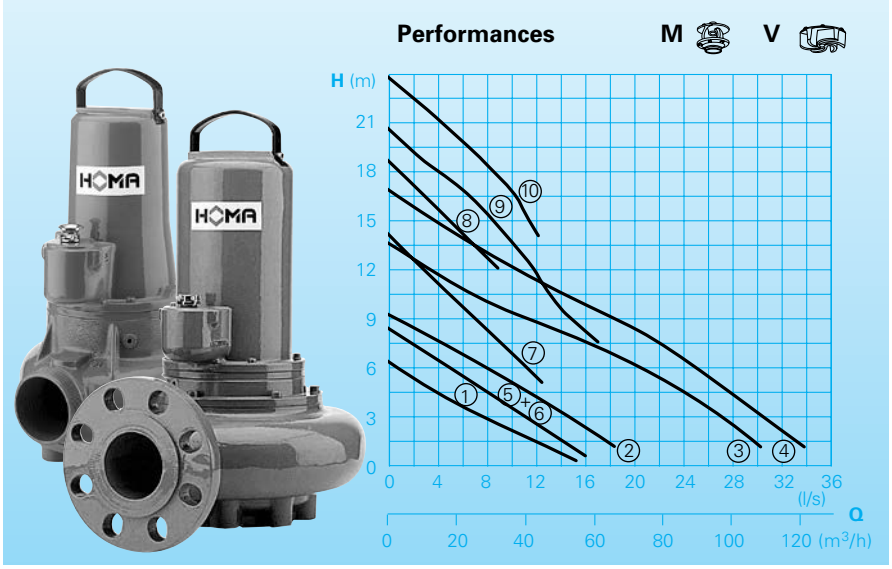

Technical Data

Curve No.	Pump type	Motor input P_1 (kW)	Motor output P_2 (kW)	Capacitor* (µF)	Speed (rpm)	Nominal current (A)	Discharge	Weight (kg)
①	TP70 M13/4D (C)(A)(Ex)	1,2	0,9		1450	2,6	BSP3"M	40
②	TP70 M16/4D (C)(A)(Ex)	1,7	1,3		1450	3,4	BSP3"M	40
③	TP70 M26/4D (C)(A)(Ex)	2,5	1,9		1450	5,5	DN80	66
④	TP70 M31/4D (C)(A)(Ex)	3,0	2,4		1450	6,3	DN80	66
⑤	TP70 V16/4W (C)(A)	1,5	1,1	40	1450	7,5	BSP3"M	40
⑥	TP70 V15/4D (C)(A)(Ex)	1,4	1,1		1450	3,1	BSP3"M	40
⑦	TP70 V31/2D (C)(A)(Ex)	3,0	2,6		2900	5,7	BSP3"M	56
⑧	TP70 V36/2D (C)(A)(Ex)	3,5	2,9		2900	6,3	BSP3"M	56
⑨	TP70 V50/2D (C)(Ex)	5,2	4,4		2840	8,7	BSP3"M	56
⑩	TP70 V50/2HD (C)(Ex)	5,2	4,4		2840	8,7	BSP3"M	56

Model W: 230-240 V / 1 Ph
Model D: 400-415 V / 3 Ph
* Capacitor: For the operation it is necessary to install a capacitor in the control box.

Model A: With automatic level control HOMA-Nivomatik
Model Ex: Explosion proof

Explosion protection:
All models are available with explosion proof motors according to
Ⓔx II 2GEEx d [ib] IIB T4 on request.

Materials:

Motor housing, pump housing, impeller	Cast iron GG 25/EN-GJL-250
Rotor shaft, screws	Stainless steel
Mechanical seal	Silicon-carbide
O-Rings	Perbonane

Equipment supplied

Pumps without ring base stand or auto-coupling unit (see accessories).

Model W (230-240 V/1 Ph):
10 m of cable. Control box W19; WT19 available as accessories.

Model D (400-415 V/3 Ph):
10 m of cable. Control box D32; DT32 available as accessories.

Model A: With additional automatic level control, control box WA10/19, DA10/32; DA10/12 with overload protection, manual-auto switch and 10 m of cable. Model W with integrated capacitor. Model Ex with intrinsicly safe relay.

Dimensions and Installations

Free standing pump with ringbase stand
Models with discharge BSP3"M

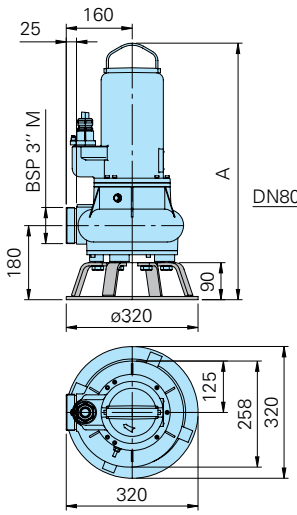

Models with discharge DN80

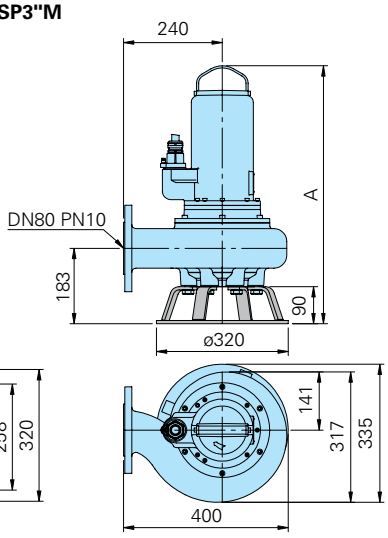

Single pump station

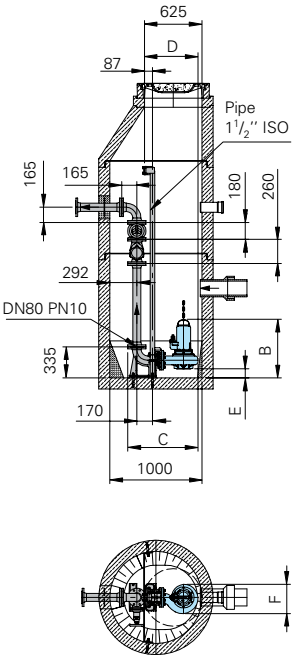

Twin pump station

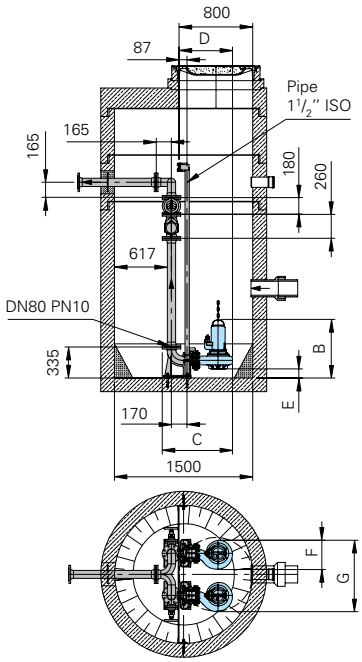

Pump type	A	B	C	D	E	F	G
TP70V(15-16)/4(C)W(D)(Ex)	586	596	643	460	100	258	716
TP70M(13-16)/4(C)D(Ex)	586	596	643	460	100	258	716
TP70M(26-31)/4(C)D(Ex)	626	633	764	581	97	317	775
TP70V(31-36)/2(C)D(Ex)	623	633	643	460	100	258	716
TP70V50/2(C)D(H)(Ex)	661	671	643	460	100	258	716

all dimensions in mm

Accessories

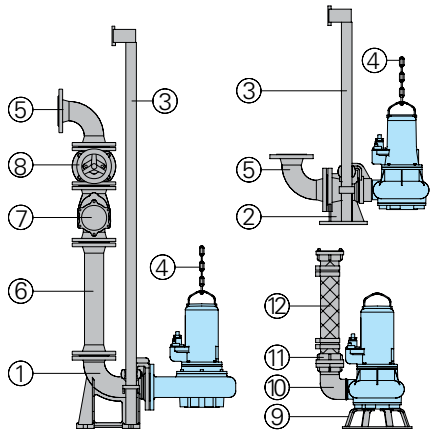

Part Description	Dimension	Part No.
① Cast iron autocoupling system with autocoupling with flange DN 80 and upper slide rail bracket BSP 1½"		
– Type KK80/R 3" with flanged pump coupling	BSP 3" F	8604035
– Type KK 80/80 with flanged pump coupling	DN 80	8604025

Part Description	Dimension	Part No.
② Cast iron autocoupling with through autocoupling (horizontal discharge) DN 80 and upper slide rail bracket BSP 1½"		
– Type KS 80/R 3" with flanged pump coupling	BSP 3" F	8604050
◯ Auto-coupling system complete or partial in stainless steel	all types	on request
◯ Screw-kits for installation of coupling system		on request
③ Guide rails, pair, per m		
steel galvanized	1½" dia.	2190155
stainless steel	1½" dia.	2190254
④ Lifting chain, per m		
steel galvanized	5 mm dia.	2800350
stainless steel	5 mm dia.	2800353
Shackle		
steel galvanized for chain	5 mm dia.	2801450
stainless steel for chain	5 mm dia.	2801390
⑤ 90° flanged elbow	DN 80	2153302
	DN 100	2153303
Flanged Y-piece for twin pump arrangement, horizontal discharge (vertical discharge on request)	3x DN 80	2160006
	DN 80/80/100	2160008
	3x DN 100	2160010
⑥ Flanged discharge pipe with gasket and fixing bolts, per m	DN 80	2152081
	DN 100	2152201
Discharge pipe, per additional m	DN 80	2150080
	DN 100	2150100
Flanged reducer		On request

Part Description	Dimension	Part No.
⑦ Flanged swing check valve with gasket and fixing bolts	DN 80	2212807
	DN 100	2212809
⑧ Flanged gate valve with gasket and fixing bolts	DN 80	2216080
	DN 100	2216100
⑨ Ring base stand		7321345
⑩ 90° elbow	BSP3"F/M	2111805
Flanged 90° elbow	DN 80	2153302
Threaded flange	DN 80/BSP3"F	2215080
⑪ STORZ-fixed coupling	B-3"F	2010602
STORZ-hose coupling	B-75 mm dia.	2013502
⑫ Reinforced hose with 2 B-size half couplings, 75 mm dia.	length 2 m	2161042
	length 3 m	2161043
	length 5 m	2161045
Flanged reinforced hose 90 mm dia., DN 80	length 2 m	2161032
	length 3 m	2161033
	length 5 m	2161035
Reinforced hose, per m	75 mm dia.	2632075
	90 mm dia.	2632090
Flanged spigot DN 80	90 mm dia.	2171014
Hose band	85/20	2308520
	92/20	2309220
◯ Control panels for single and multipump stations with automatic level control		On request

HOMA PUMP TECHNOLOGY

HOMA Pumpenfabrik GmbH
P.O. Box 22 63, D-53814 Neunk.-Seelscheid
Tel. +49 (0) 22 47 / 702-0, Fax +49 (0) 22 47 / 702-44
e-mail: info@homa-pumpen.de
www.www.homapumps.com

3.0/0610 (ST) 001 jes / No. 0033031EN

We reserve the right to alter our specifications without notice