HOMA PUMP TECHNOLOGY

Floor mounted compact drainage water and effluent box

Saniquick C

Performances
C 235, CR 360

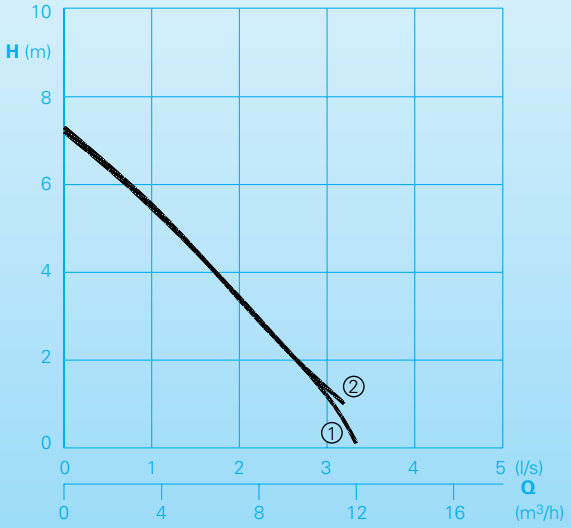

Application

Compact mini pump station for sanitary installations with hand basins and washing machines in basement apartments or cellars which are below sewer backflush level. The Saniquick C is also the ideal solution for subsequent installation of sanitary facilities. The built-in stainless steel drainage pump operates automatically by a floatswitch control. The discharge pipe with 1 1/4 " minimum diameter can be easily installed with minimum construction work. The Saniquick's compact design allows installation directly under the hand basin, where space is at a premium.

Pumped liquid: Domestic drainage water and effluent.
Maximum liquid Temperature: 35°C, short term up to 60°C.

Operation: Intermittent.

Technical Data

Curve No.	Pump type	Motor-input P_1 (kW)	Motor-output P_2 (kW)	Spannung 50 Hz (V)	Nominal current (A)	Discharge	Weight (kg)
①	Saniquick C – C235WA	0,35	0,18	230/1Ph	1,8	R 1 1/4''	7,2
②	Saniquick C – CR360VWA	0,63	0,45	230/1Ph	2,9	R 1 1/4''	9,5

Speed: 2900 rpm

Model W: 230-240 V/1Ph

Design

Compact domestic effluent disposal unit comprising:

Collection Tank: Odour-tight plastic collection tank. Maximum utility volume 23 litres. Two top inlets DN 40 / DN 50. An additional inlet available as needed. Discharge BSP 1 1/4'' mm diameter with integrated non-return valve. Air vent with activated carbon filter.

Pump/Motor: One single stage centrifugal submersible drainage pump. Pressure tight electric motor, insulation class F, degree of protection IP68. Open multi-channel impeller, spherical clearance 10 mm dia.
C235: open multi-channel impeller, spherical clearance 10 mm dia.
CR360V: Vortex impeller, spherical clearance 20 mm dia.

Pump Operation Control: Pneumatic level control.

Materials:

Collection tank	Polyethylene
Installation kit	Composite
Pump housing	Composite (C235) Stainless steel (CR360V)
Motor housing	Stainless steel
Impeller	Composite (C235) Stainless steel (CR360V)
Rotor shaft, screws	Stainless steel
Seal kit	Perbonane

Equipment supplied

Tank with pump, cable with plug.

Installations

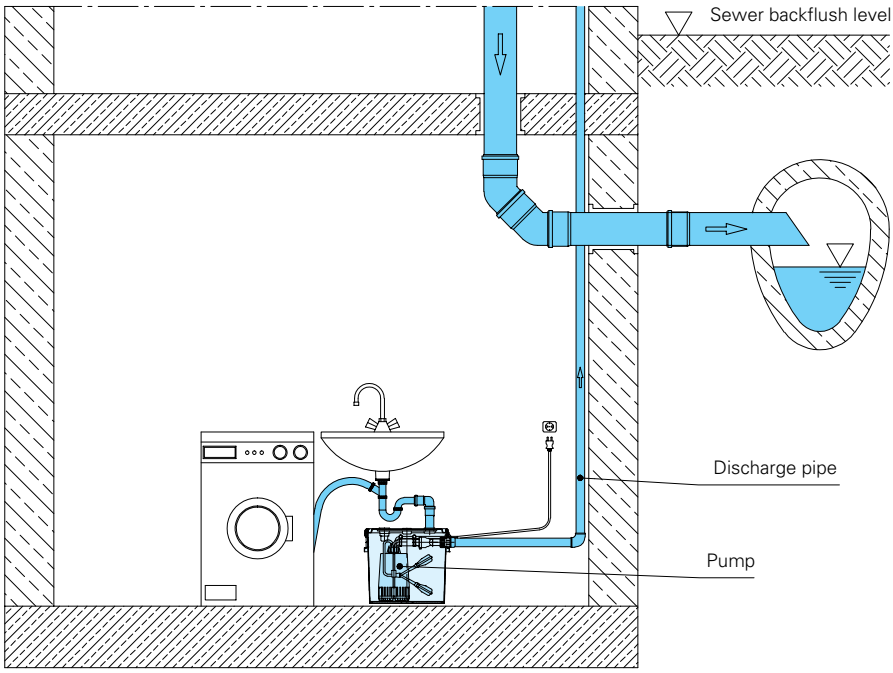

Equipment supplied /Accessories

Saniquick C
collecting tank, 1 pump with float switch, non-return-valve and discharge pipe, cable and plug

Type	Part No.
Saniquick C – C235WA	9804150
Saniquick C – CR360VWA	9804140

Accessories

Description	Dim.	Part No.
Gate valve	BSP 1 1/4" F	2216012
90° elbow	BSP 1 1/4" F	2111405
Galvanized union piece	BSP 1 1/4" F	2114304
AL 3 Alarm control panel with water level sensor		1586143

Dimensions

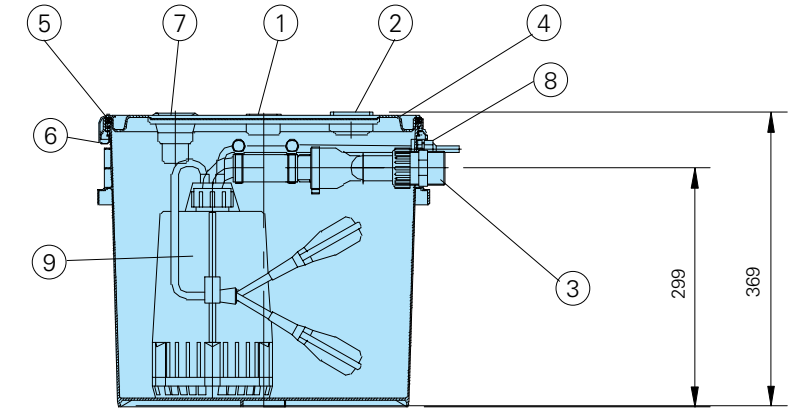

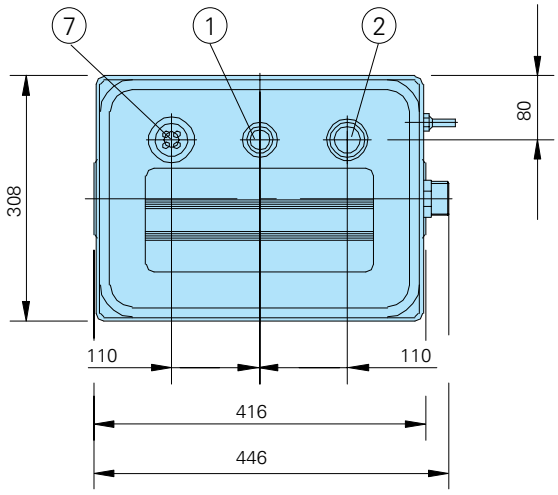

① Inlet DN30/40
② Inlet DN40/50
③ Pump discharge connection BSP 1 1/4'' M
④ Cover
⑤ Gasket
⑥ (8) Clamp
⑦ Air vent with activated carbon filter
⑧ Cable inlet
⑨ Pump with float switch

all dimensions in mm

HOMA PUMP TECHNOLOGY

HOMA Pumpenfabrik GmbH
P.O. Box 22 63, D-53814 Neunk.-Seelscheid
Tel. +49 (0) 22 47 / 702-0, Fax +49 (0) 22 47 / 702-44
e-mail: info@homa-pumpen.de
www.www.homapumps.com

We reserve the right to alter our specifications without notice

3.0/0310 (ST) 001 jes / No. 0034170EN