HOMA PUMP TECHNOLOGY

Stainless steel submersible drainage pumps for chemically aggressive liquids. Spherical clearance 10 mm.

CH 432, CH 436

Application

HOMA CH 432 and CH 436 stainless steel submersible drainage pumps are suitable for pumping corrosive, abrasive or chemically aggressive liquids, drainage water or chemicals containing soft solids up to 10 mm diameter. They are used in various domestic, industrial or municipal applications.

DIN EN 12050-2: Conformity and design approved and controlled by LGA, certificate No. 0220119.

Installation: Transportable or permanent.

Pumped liquid: Drainage water with abrasive or chemically aggressive contents, chemical liquids.
Chemical waste or effluent.
Max. liquid temperature: 40°C, short term up to 60°C, for limitation to lower temperatures see specific chemical resistance of used materials.

Operation: Permanent (S1).

Design

Fully submersible, compact integrated motor-pump unit consisting of:

Pump: Single stage centrifugal pump with horizontal discharge.

Impeller: Open multi-channel impeller, spherical clearance 10 mm.

Motor: Fully submersible, pressure tight electric motor. Insulation class H, degree of protection IP 68. Thermal sensor embedded in the winding.
Cable: H07RN-F(PLUS)6G1,5
Model W: H07RN-F(PLUS)-4G1,5 with cable protective hose and longitudinally tight cable trumpet. Explosion proof motors according to Ⓔx II G EEx d II BT4.

Shaft/Bearing: Large diameter stainless steel rotor shaft, pre-lubricated bearings.

Seals: Combination of mechanical seal and lip seal (CH 432) respectively 2 mechanical seals (CH 436) from silicon-carbide/ silicon-carbide and viton in a separate oil chamber. Oil inspection from outside.

Performances

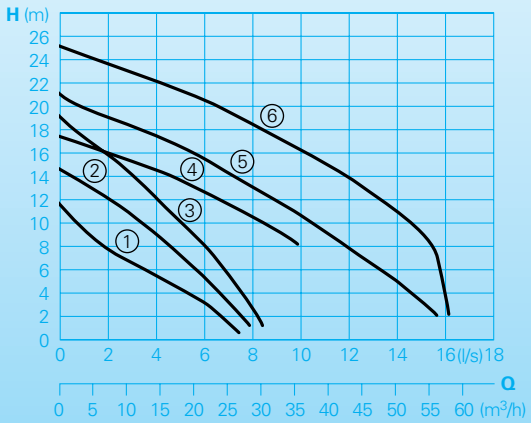

Technical Data

Curve No.	Pump type	Motor input P_1(kW)	Motor output P_2(kW)	Capacitor* (µF)	Nominal current (A)	Discharge	Weight (kg)
①	CH432-0,9/2 W (Ex)	0,9	0,7	25	5,3	BSP 2″ M	28
②	CH432-1,3/2 W (Ex)	1,3	1,0	25	6,6	BSP 2″ M	28
③	CH432-1,7/2 W (Ex)	1,7	1,3	30	7,9	BSP 2″ M	28
①	CH432-0,9/2 D (Ex)	0,9	0,7		1,9	BSP 2″ M	28
②	CH432-1,2/2 D (Ex)	1,2	0,9		2,3	BSP 2″ M	28
③	CH432-1,6/2 D (Ex)	1,6	1,2		2,8	BSP 2″ M	28
④	CH436-1,9/2 D (Ex)	1,9	1,5		4,0	BSP 2 1/2″ M	40
⑤	CH436-2,4/2 D (Ex)	2,4	1,9		4,6	BSP 2 1/2″ M	40
⑥	CH436-3,5/2 D (Ex)	3,5	2,8		7,1	BSP 2 1/2″ M	52

Speed: 2800 rpm
Model W: 230-240 V / 1 Ph
Model D: 400-415 V / 3 Ph

Ex Model: explosion proof
* Capacitor: For the operation it is necessary to install a capacitor in the control box.

Materials:	
Pump housing, motor housing, impeller	Stainless steel 1.4436
Rotor shaft	Stainless steel 1.4462
Mechanical connecting parts	Stainless steel 1.4571
O-Rings	FPM (Viton)
Mechanical seals	SiC/SiC, FPM (Viton)
Shaft seal ring	FPM (Viton)
Cable protective hose	Polyolefine

Equipment supplied

Pump with 10 m of cable, 5 m cable protective hose.
Possible control boxes:
Model W: W19; WZ19
WEx: WT19
Model D: DT32; DZ12
DEx: DT32
available as accessories.

Dimensions and Installations

CH432

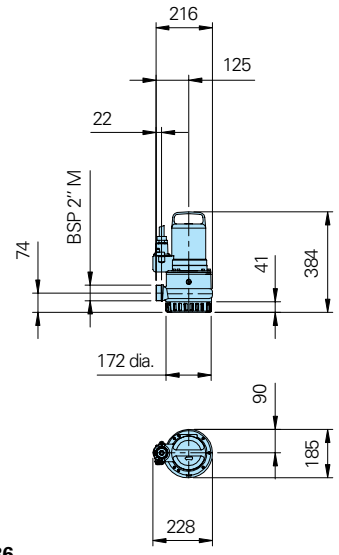

CH432
KKC50 / BSP 2" - VA

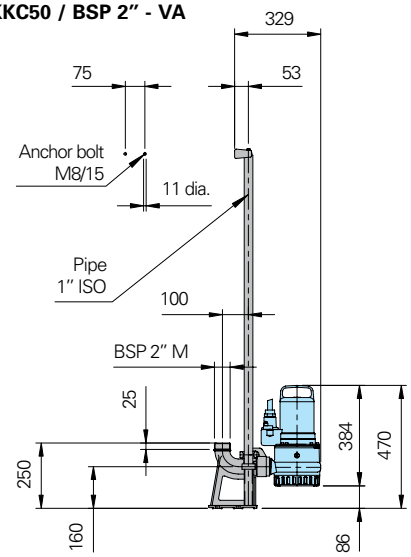

CH436
KKC65 / BSP 2½" - VA

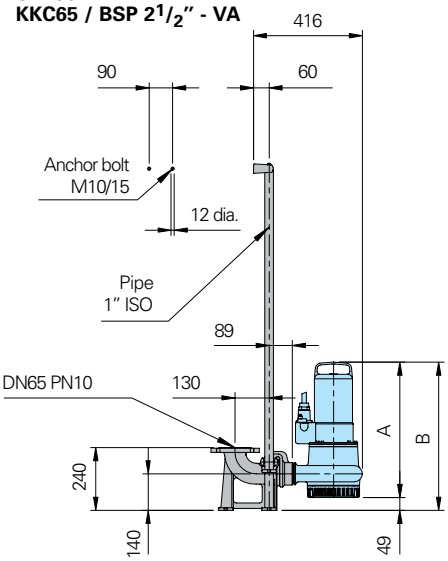

CH436

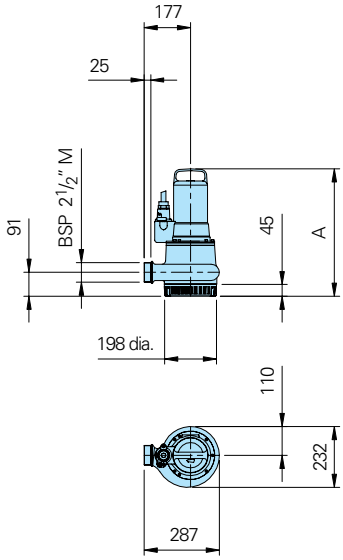

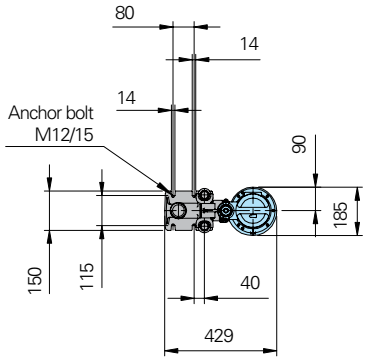

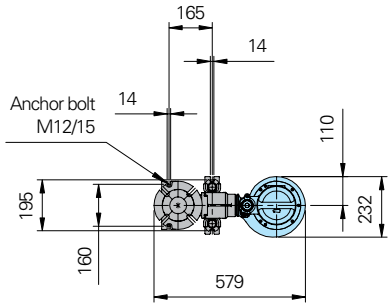

all dimensions in mm

Pump type	Dimension A	Dimension B
CH436-1,9/2D(Ex)	486	535
CH436-2,4/2D(Ex)	486	535
CH436-3,5/2D(Ex)	517	566

Accessories

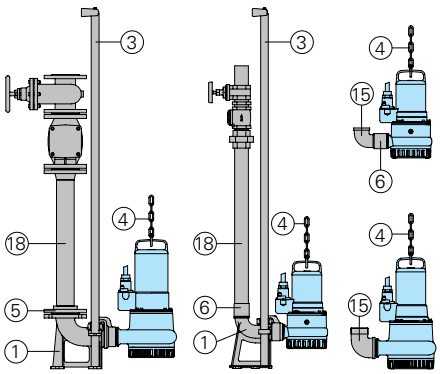

Part Description	Dimension	Part No.
① Auto-coupling system from stainless steel 1.4436 consisting of auto coupling with flange, flange pump coupling and upper slide rail bracket		
- Type KKC 50/R 2"	BSP2"/BSP2"	8604011
- Type KKC 65/R 2 ½"	DN 65/BSP2½"	8604017
○ Auto-coupling system complete or partial in stainless steel	all types	on request
○ Screw-kits for installation of coupling systems		on request
③ Guide rails, pair, per m stainless steel	1" dia.	2190253
④ Lifting chain, stainless steel 1.4401, per m	5 mm dia.	2800351
Shackle, for chain stainless steel 1.4401	5 mm dia.	2801390

Part Description	Dimension	Part No.
⑤ Screw flange, stainless steel 1.4571	DN 50, PN16 DN 65, PN16	2215112 2215115
⑥ Double socket stainless steel 1.4571	BSP2" F BSP2½" F	2216042 2216043
⑮ Elbow 90°, stainless steel 1.4401	BSP2" F/M BSP2½" F/M	2111825 2111826
⑱ Stainless steel or plastic discharge pipe and fittings		on request
○ Pump controls and control panels for permanent or transportable installation, level controllers and monitoring devices		see HOMA-accessories

HOMA PUMP TECHNOLOGY

HOMA Pumpenfabrik GmbH
P.O.Box 22 63, D-53814 Neunk.-Seelscheid
Tel. +49 (0) 22 47 / 702-0, Fax +49 (0) 22 47 / 702-44
e-mail: info@homa-pumpen.de
www.homapumps.com

We reserve the right to alter our specifications without notice!

3.0/0711 (ST) 001 jes / Nr. 0031071 EN